SIMPLER ALL OVER.
SIMPLER ALLROUND.

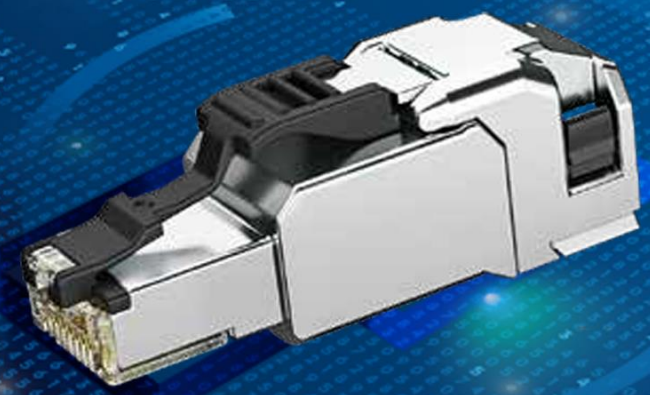

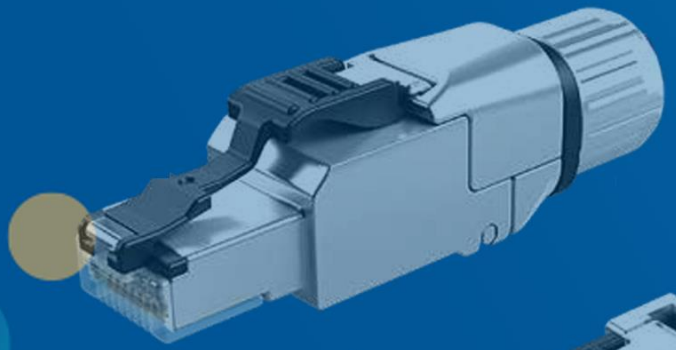

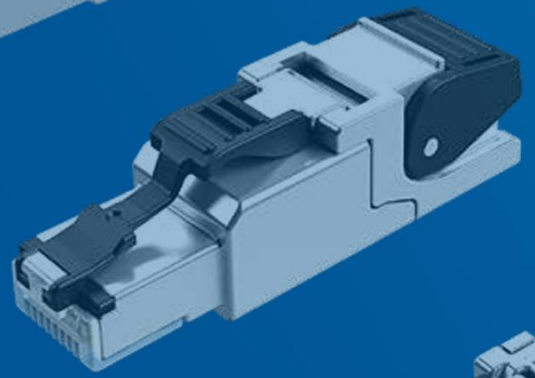

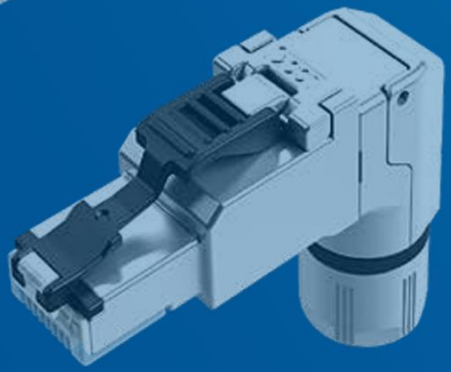

e MFP8 connector series is the ideal solution for all applications with
nsmission rates up to 40 Gigabit Ethernet. Whether in the office or in
data center, in industry, in security technology or in home networks:
MFP8 offers maximum flexibility for minimal effort.

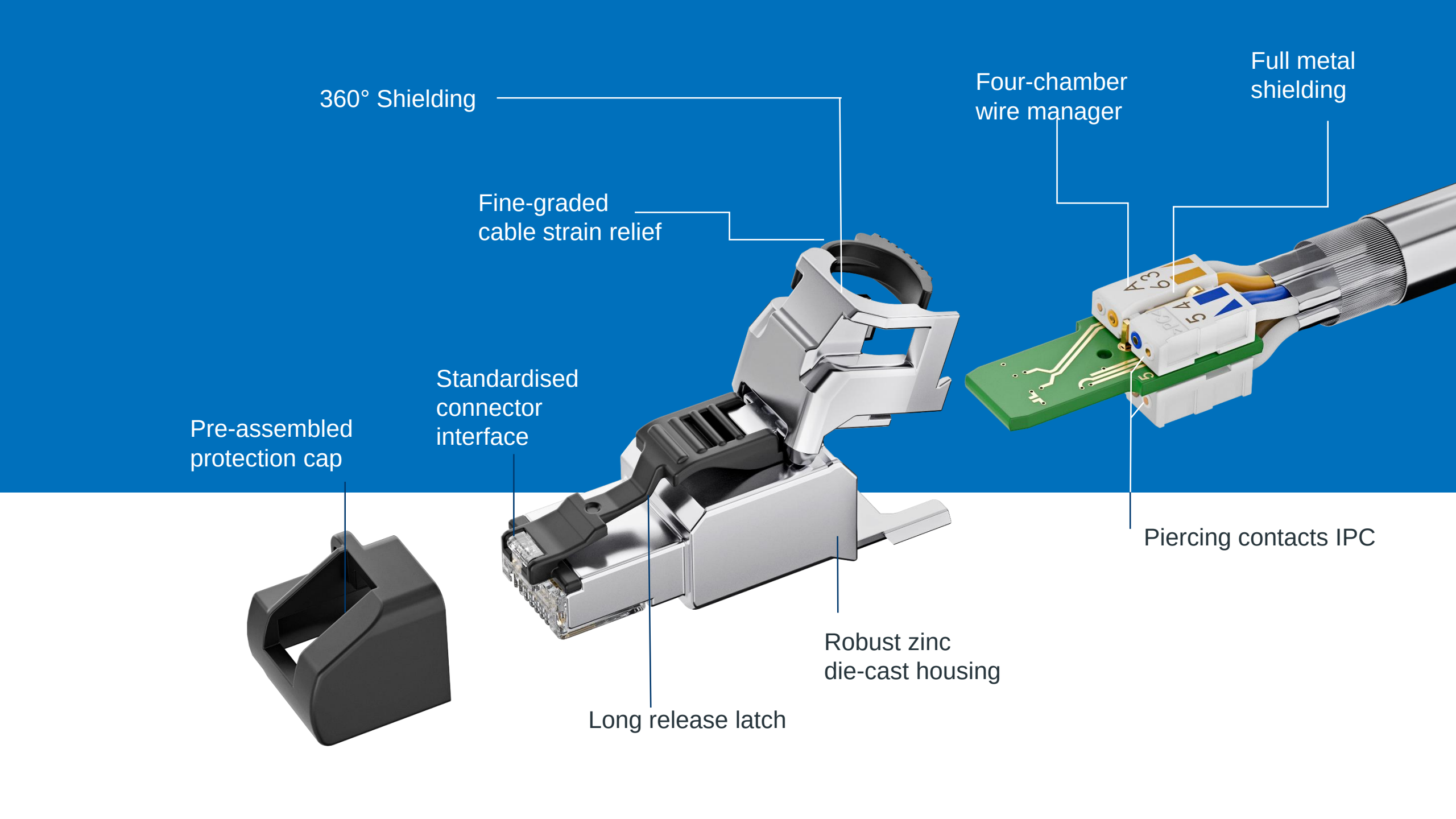
360° Shielding
Fine-graded
cable strain relief
Standardised
connector
interface
Pre-assembled
protection cap
Long release latch
Robust zinc
die-cast housing
Four-chamber
wire manager
Full metal
shielding
Piercing contacts IPC

THE SHORT ONE

MFP8-SL Cat.6_A

RJ45 connector with an extremly short length.

Ideal for applications where space is critical, e.g. for installation in devices.

- just 44 mm long
- integraded strain relief, integrated cable shield connection
- only two parts = quick and secure assembly
- for confined spaces in housings or for high packing densities
- cable outer diameter: 5.0 – 9.0 mm
- temperature range: -40°C up to 85°C
- 4 Pair Power over Ethernet (4PPoE) acc. IEEE 802.3bt
- IP20

IMPROVED STRAIN RELIEF

Reduced mechanical stress thanks to the fine-graded cable strain relief which can be adjusted to various cable diameters up to 9 mm.

Improved strain relief due to small barbs that retain the cable jacket.

THE SHORTEST OF ITS CLASS

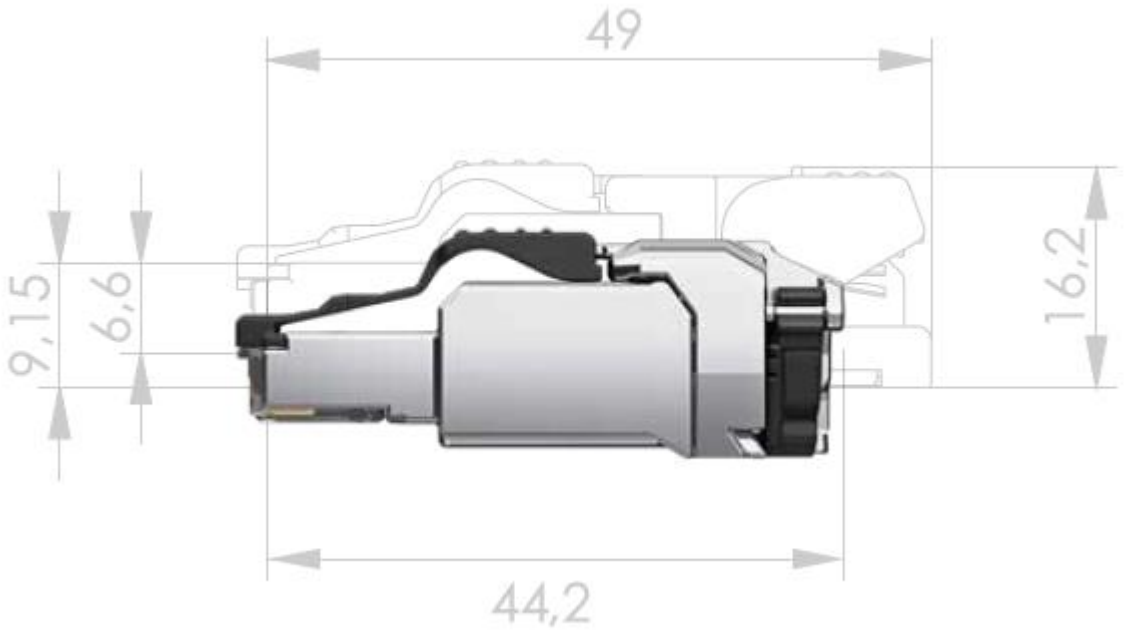

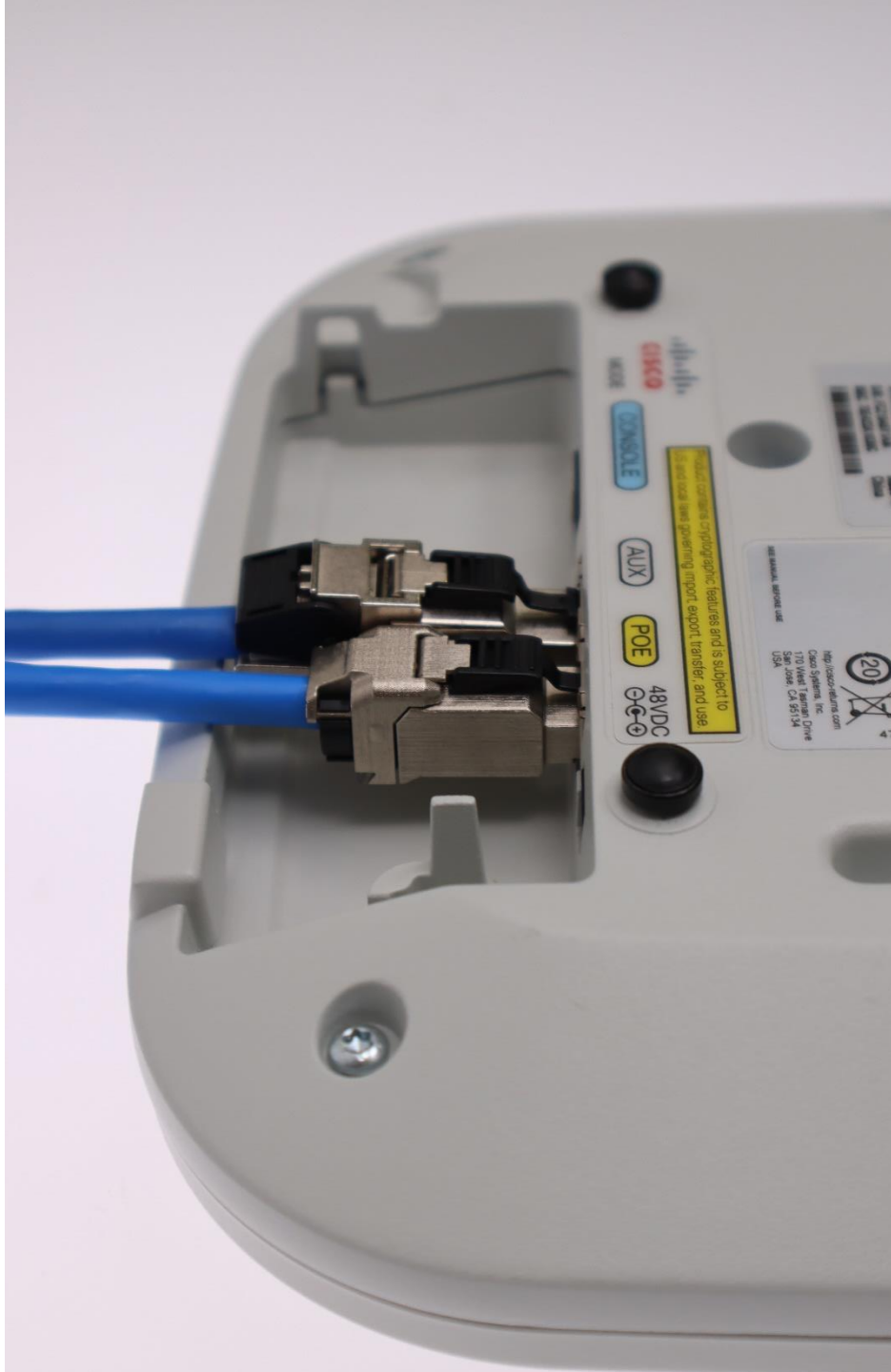

THE CLASSIC

MFP8 Cat.6_A

RJ45 connector with full metal housing and four-step cable strain relief.

Idela for office, data center and residential cabling.

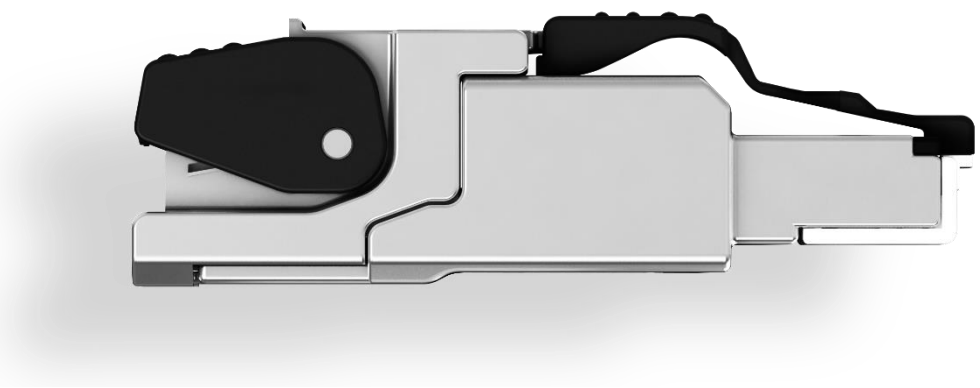

- category 6_A acc. ISO /IEC 11801
- connector as defined by IEC 60603-7-51
- life ≥ 750 mating cycles
- contact finish material: Ni1,2Au0,8
- cable outer diameter: 5.0 – 9.0 mm
- reusable IPC: ≤ 4 cycles
- temperature range: -40°C up to 85°C
- 4 Pair Power over Ethernet (4PPoE) acc. IEEE 802.3at
- IP20; UL listed

THE INDUSTRIAL ONE

MFP8 IE Cat.6$_A$

RJ45 connector with full metal cable strain relief for cable diameters up to 10 mm.

Ideal for assembling industrial installation and patch cables.

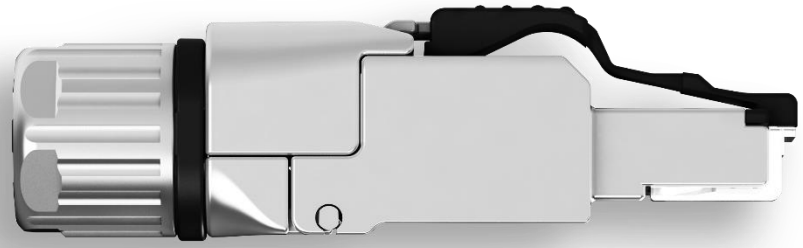

- full metal housing with 360° shielding
- robust, screwed cable outlet
- cable strain relief SW13
- outer cable diameter: 5.5 – 10.0 mm
- temperature range: -40 °C up to 85 °C
- 4 Pair Power over Ethernet (4PPoE) acc. IEEE 802.3at
- IP20, UL listed
- ideal for industrial application such as PROFINET, Ethernet, EtherCAT, EtherNet/IP, CC link and much more

THE FLEXIBLE ONE

MFP8-4x90 Cat.6_A

RJ45 connector with angled housing and variable cable entry at right angles from four directions.

Ideal for specific installation situations such as 19“ patch panels.

- cable outlet free selectable (4 x 90°)
- locking can be released and changed subsequently
- metallic cable strain relief by means of screw-clamp connection (SW13)
- cable outer diameter: 5.5 – 10.0 mm
- temperature range: -40 °C up to 85 °C
- 4 Pair Power over Ethernet (4PPoE) acc. IEEE 802.3at
- IP20, UL listed

MORE INFORMATION

If you would like to find out detailed information about the MFP8 products please visit our product page:

Please scan!